Water Coils

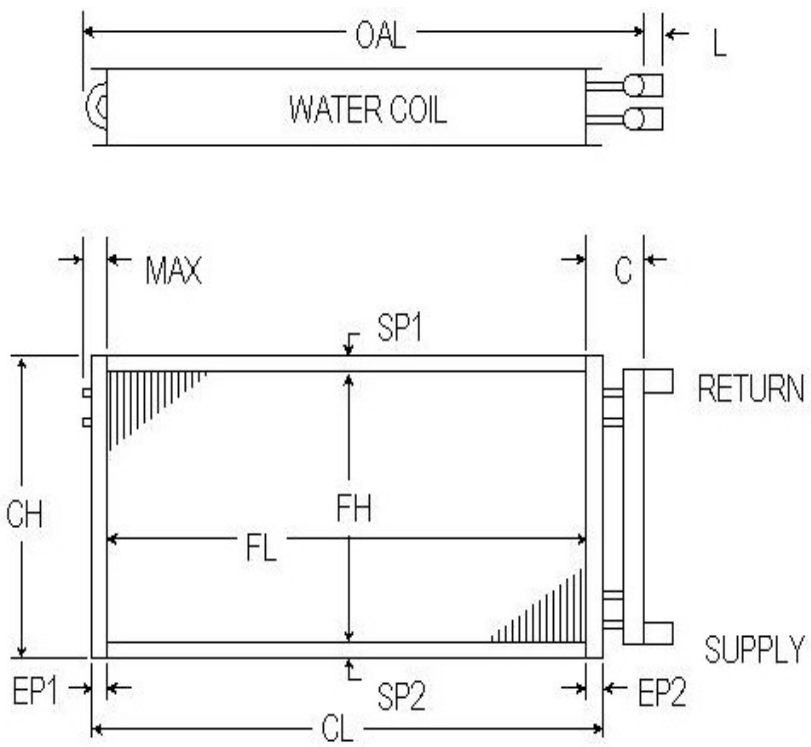

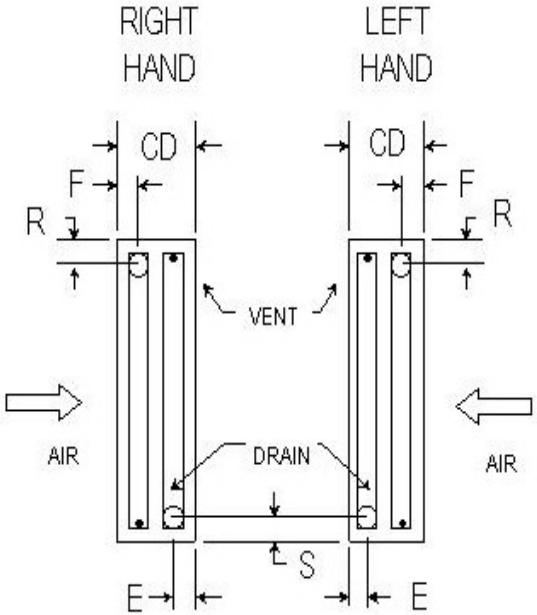

ROWS AVAILABLE	1	2	3	4	5
	6	8	10	12	
FPI AVAILABLE	6	7	8	9	10
	11	12	13	14	
TUBES OD & Wall Thickness *COPPER ONLY*	5/8	.020	.025		
		.035	.049		
	1/2	.016			
FINS Material & Thickness	ALUM.	.006	.010		
	COPPER	.006			
CASING	16 GA. GALV. STEEL				
	16 GA. STAINLESS STEEL				
HEADERS *COPPER ONLY*	5/8	7/8	1 1/8		
	1 3/8	1 5/8	2 1/8		
	2 5/8	3 1/8			

DIMENSIONAL DATA IN INCHES																	SUPPLY		RETURN		CONNECTION SIZES		
																					MPT	SWEAT	FPT
ITEM	QTY	ROWS	FPI	SP1	FH	SP2	CH	EP1	FL	EP2	CL	MAX	C	OAL	L	CD	S	E	R	F	SUPPLY	RETURN	CU
																							STL

P.O. #		CUSTOMER	
W.O. #		MODEL NO.	
APPROVED BY		TAG:	
DATE		NOTES	

PRECISION COILS

Right Fit. Right Now.

Performance Data	CFM		EDB/EWB		LDB/LWB		CAPACITY		EWT		LWT		GPM	